ALL WIRES 16GA UNLESS NOTED OTHERWISE.

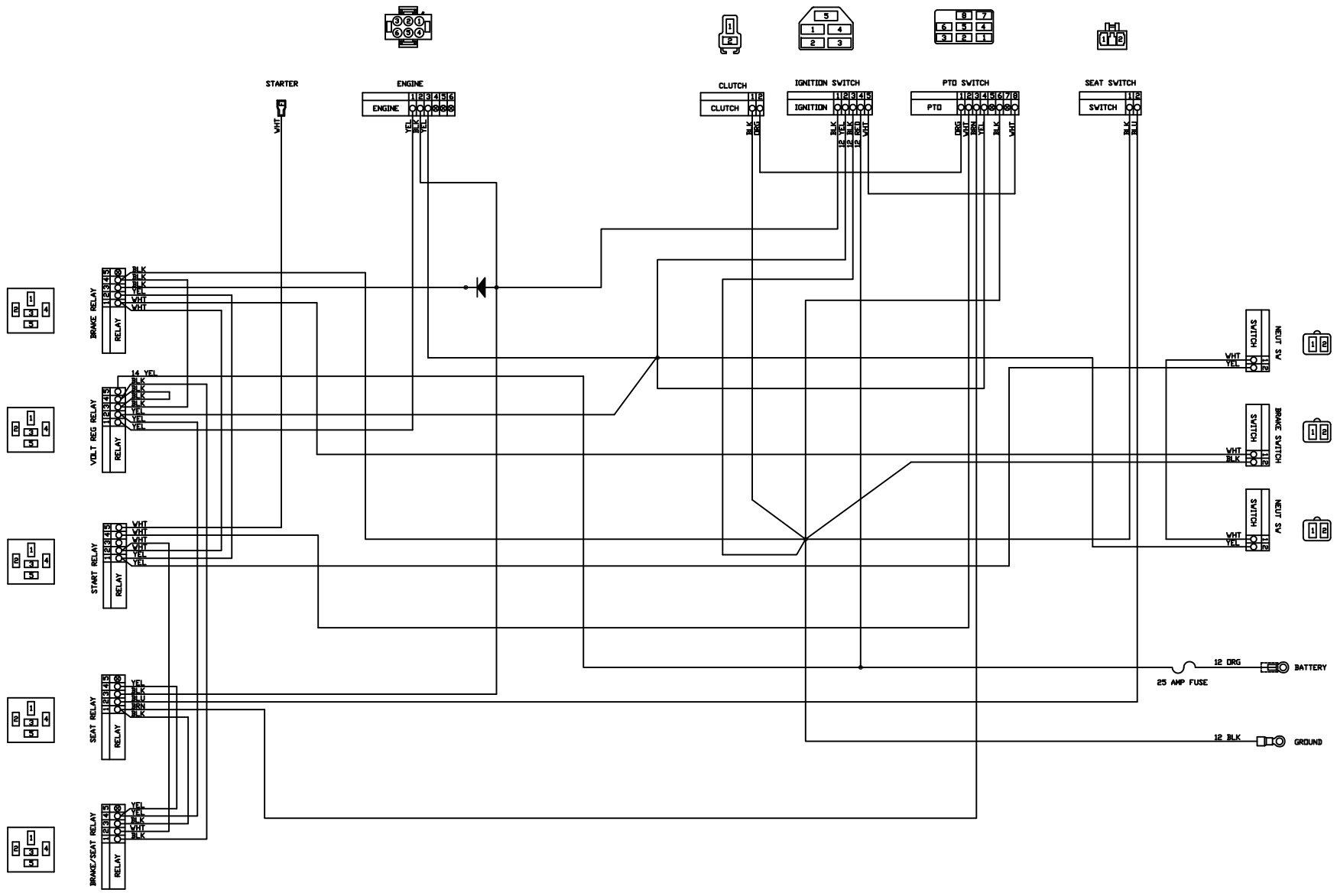


ELECTREX, INC.
HUTCHINSON, KS

| | |
|---|---|
| CUSTOMER | BAD BOY |
| THEIR P/N | 086-0075-00 |
| DWG TITLE | SCHEMATIC |
| OUR P/N | 9198056SCHEMATIC |
| P 1 OF 1 | REVISION A |
| DRAWN BY MAR | DATE 9/24/09 |

THIS DRAWING AND THE INFORMATION IT CONTAINS ARE THE PROPERTY OF ELECTREX, INC. AND MAY BE USED BY OTHERS ONLY AS AUTHORIZED BY US.